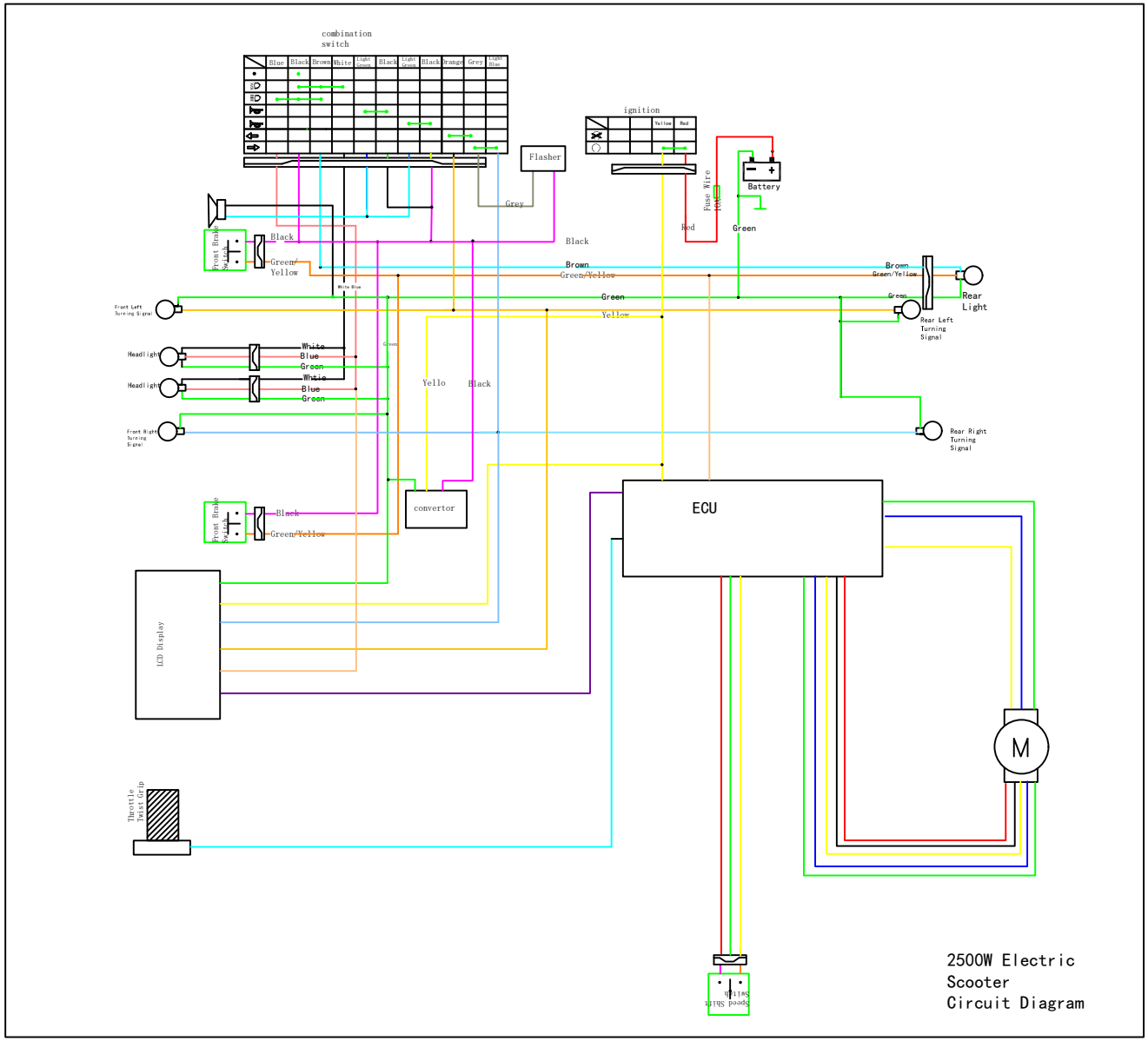

2500W Electric Scooter Circuit Diagram